专 业 / 信 赖 / 品 质
Speciality Trust Quality

2016 12 SN Rv5

若设计与规格变更，恕不另行通知。如果您想了解当前版本的更多信息和支持，请访问sc-hb@accessen.cn我们将会及时向您回复。
Designs and Specifications are subject to change without notice for further improvement.

Accessen

OUSTANDING
艾克森 • 不同凡响

Accessen | 随需应变的换热解决方案！
On Solution For Heat Exchanger

上海艾克森集团有限公司 Shanghai Accessen Group Co., Ltd. | 上海艾克森新技术有限公司 Accessen.New-Tech.Shanghai Co., Ltd. | 艾克森（苏州）传热技术有限公司 Accessen(Suzhou)Heat Transfer Technology Co., Ltd.

销售热线 / Sales Line：8008 191 191
服务热线 / Service Line：4006 191 191

地址：上海市嘉定区谢春路1458号
邮编：201804
电话：+86 21 6959 5555
传真：+86 21 6959 0007
信箱：info@accessen.cn
网址：www.accessen.cn

Add:No.1458 Xiechun Rd, Jiading District,Shanghai
Post Code：201804, China
Tel：+86 21 6959 5555
Fax：+86 21 6959 0007
E-mail: info@accessen.cn
Website: www.accessen.cn

公众号　企业官网

艾克森通过卓越的换热技术和制造工艺，
使世界逐渐成为一个更加温暖，舒适安全的生活空间，也能灵活的满足工业应用中不同的工艺温度要求。
作为随需应变的换热解决方案的倡导者，
艾克森带给行业全新的挑战，
令生活充满想像。

Through Accessen distinguished heat transfer technology and manufacture process.
We make world as a warmer and more comfortable living space, meanwhile.
We flexibly meet to various process temperature approaching in industrial application.
As to a Pioneer of "On Solution For Heat Exchanger",
We lead a new challenge to industry, bring more imagination to life.

CONTENTS

01 经典行业案例 01 Case Story

13 暖通、工业产品 13 Hvac & industrial

25 先进制造 25 Manufacturing

51 企业文化 51 Culture

59 艾克森集团历程 59 History

安全无忧的守护者

在中国，俯视世界。高耸入云的超高层建筑赋予中国童话般的故事和传奇的色彩，世界的视线因此而改变，同时也对温差、压力和成本提出苛刻的要求。艾克森始终和中国的最高高度保持一致，凭借0.5度温差、30公斤压力极限、30年免费维护，确保“天空中的生活”安全无忧。

Safety Guarder

→ In China, Overlook the world. Cloud-kissing skyscraper enliven architecture a Fairy Tale and Legend color, the world view had been changed; whereas, there are higher standard toward to temperature approach, pressure and cost. Accessen always keep same peace with the highest record of China, breakthrough 0.5 temperature approaching, 30 bar pressure design, 30 years free maintenance, facing “Skyscraper Life” we play a reliable “Safety Guarder”

636 m

武汉绿地中心

中国第一高楼　全球第二

Wuhan Greenland Center
China 's tallest building
Second in the world

高端住宅别墅

High-end Residential Housing

实现梦想中温暖、舒适的生活

让生活充满温暖和舒适。艾克森始终致力于将领先的换热技术应用于暖通空调。

我们不断的提升换热设备的性能和经济运行。将前沿的低温辐射技术应用于舒适环境中去改善我们的生活。

Dreaming Warm And Comfortable Life In Reality

As a commitment to make life warm and comfortable, Accessen devoted to putting leading thermal transfer technology into HVAC field.

We make continuous improvement on equipment performance and economic operation, vivid our life by applying low-temp radiation technology into our favorable environment.

交通枢纽
High-end Residential Housing

首都T2、T3机场

云计算

数据中心
Cloud Data centers

天河二号

TH-2 High Performance Computer System

天河二号超级计算机中心

梅赛德斯奔驰文化中心

公共设施
Public facilities

梅赛德斯-奔驰文化中心

Mercedes-Benz

上海世博
World Expo Shanghai

中国馆

行政事业机关
Government
Buildings

国家博物馆

万达广场
Wanda Plaza
Commercial building

万达广场

迪拜商业区

区域供冷
District cooling

医学院科研文体
Hospitals,Schools and
Research Institutes

北京体育大学体育馆

高端住宅别墅
High-end Residential Housing

中鹰黑森林

洲际酒店

酒店宾馆休闲
Hotels

汽车及零部件
Automotive and parts

奔驰汽车

医药生命科学
Medical Life Sciences

拜耳医药

电力能源核电
Electrical energy

电力

石油化工
Petrochemical

中石化

PRODUCTS REVIEW

专业化分工随着时代的进步而来，我们专注于换热设备的研究和开发，为客户创造更多价值。将科技最前沿的技术融入到我们的设计和产品中，加速行业进步和技术变革，让更多的用户得到适合自己需求的解决方案，更注重可持续长远发展和伙伴的长期关系。
在不同行业产品应用中，艾克森在各行业中有着丰富的应用经验，能为你提供安全可靠的换热解决方案。

Industrial Specialization is coming as society progress, we concentrated on researching and developing in thermal transfer products, we create more value to client. We putting leading technology into our design and production, speed up the industrial progress and technology innovation, let more end user to achieve customized solution and sustainable development with partner. With the profound experience in segment industries, Accessen would like to provide the more safety and reliable thermal transfer solutions.

暖通空调产品应用 HVAC PRODUCT APPLY
工业产品应用 INDUSTRY PRODUCT APPLY

HVAC PRODUCT APPLY

暖通空调产品应用

1

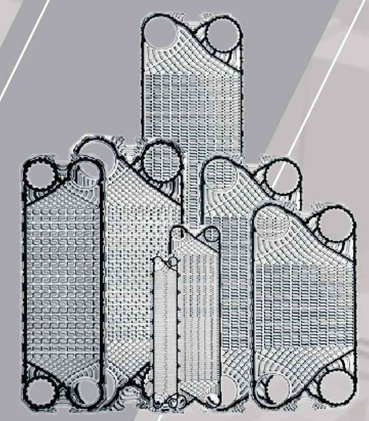

2

3

4

5

1、AU, AN, AS, AP, AC系列可拆垫片式换热器
2、AF系列无触点超宽流道板式换热器
3、AHWV容积式换热器
4、AWD系列全焊接板框式换热器
5、AWPS系列全焊接板壳式换热器

1、Gasket Plate Heat Exchanger (Au, An, As, Ap, Ac Series)
2、Free flow Plate Heat Exchanger Af Series
3、AHWV Displacement Heat Exchanger Series
4、All-weld Plate And Frame Heat Exchanger Awd Series
5、All-welded Plate And Shell Heat Exchanger Awps Series

HVAC PRODUCT APPLY

暖通空调产品应用

06

07

08

09

10

06、ABJ定制系列板式换热机组
07、APS标准系列板式换热机组
08、ADHU系列分布式燃气机组
09、ADML系列末端入口调节装置
10、AMOBILE魔方移动集装箱式换热站

06、Customization Plate Heat Exchanger ABJ Series
07、Standard Plate Heat Exchanger Unit APS Series
08、Gas Distributed Unit ADHU Series
09、Terminal Entrance Control Device ADML Series
10、AMOBILE A Movable Container Exchange Heating Station

INDUSTRY PRODUCT APPLY

工业产品应用

01

02

03

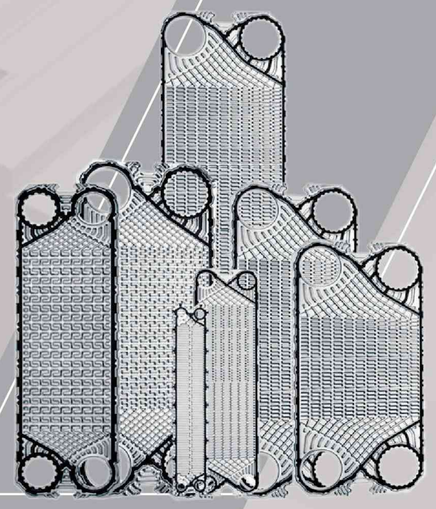

04

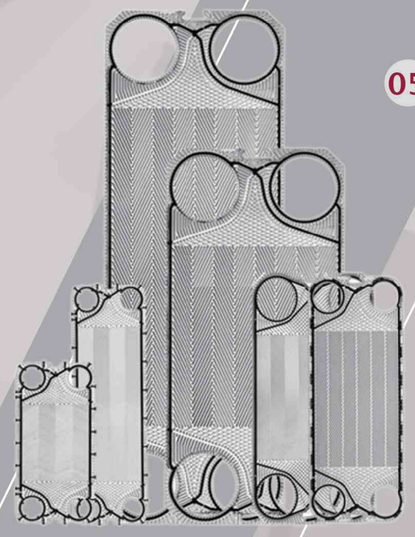

05

01、AU，AN，AS，AP，AC 系列可拆垫片式换热器
02、AM系列船舶及海洋工程应用
03、ASM系列不锈钢多段式板式换热器
04、AF系列无触点超宽流道板式换热器
05、ASW系列激光半焊接板式换热器

01、 Gasket Plate Heat Exchanger (AU，AN，AS，AP，AC Series)
02、 Shipping and Marine Engineering Application AM Series
03、 Stainless steel multistage type plate heat exchanger ASM series
04、 Free flow plate heat exchanger AF series
05、 Laser semi-welded plate heat exchanger ASW series

INDUSTRY PRODUCT APPLY

工业产品应用

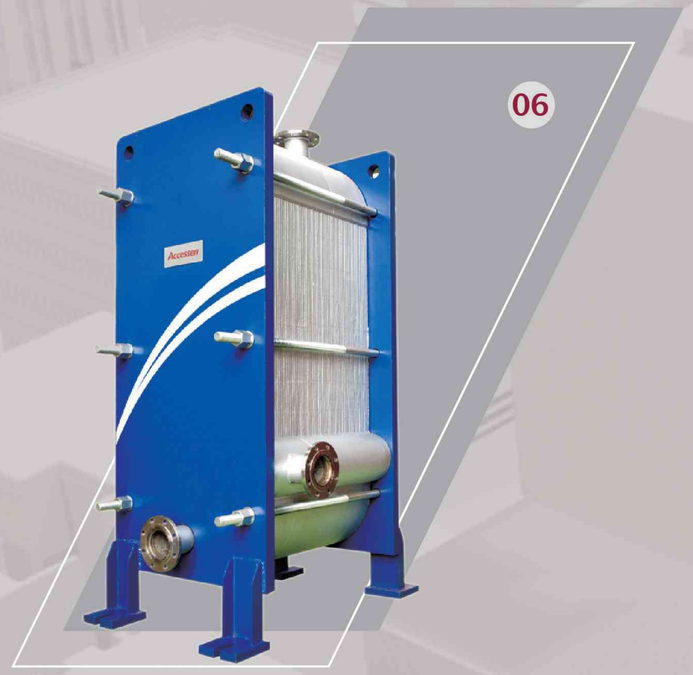

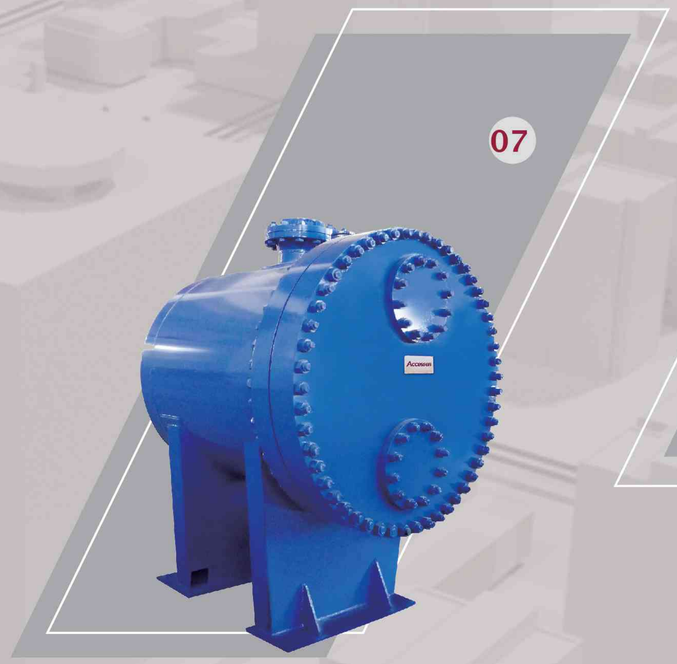

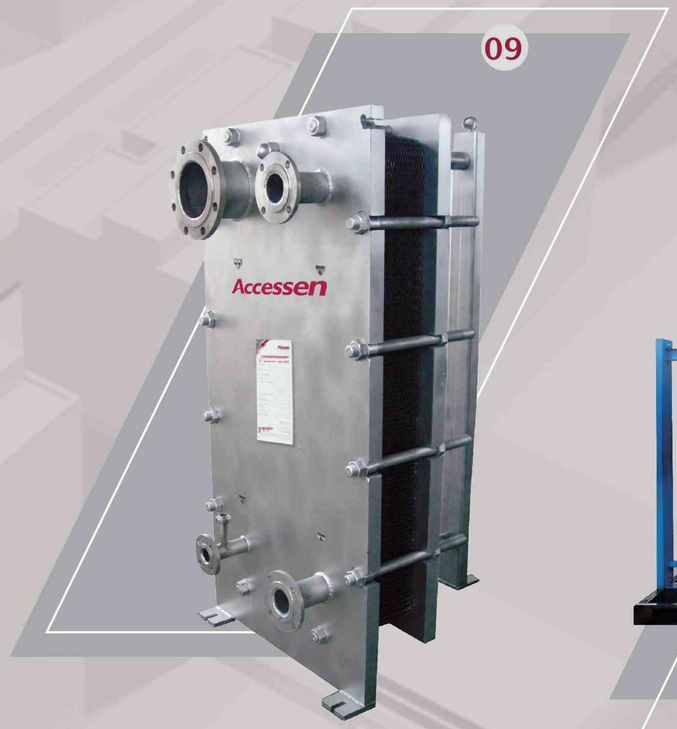

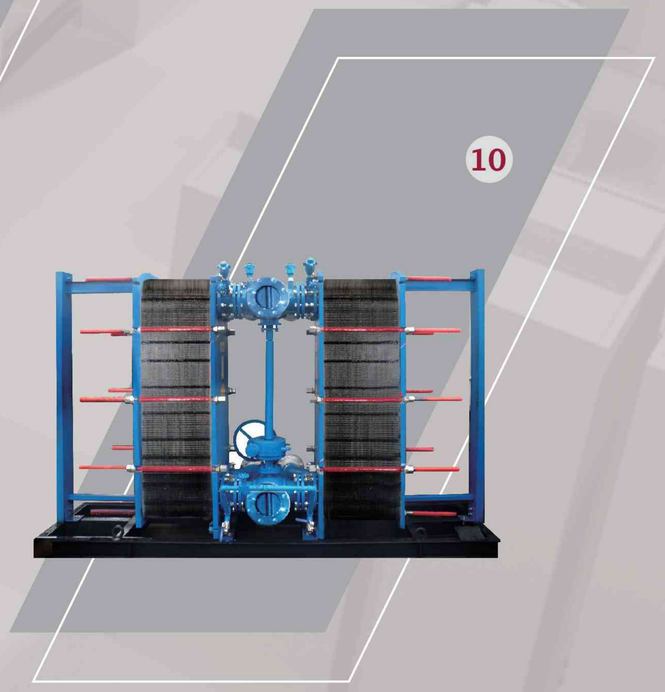

06、AWD系列全焊板框式换热器
07、AWPS系列板壳式换热器
08、ACSVap系列板式蒸发器
09、ACSCond系列板式冷凝器
10、DOCU双联式油冷却装置

06、 Plate & frame type plate heat exchanger AWD series
07、 Plate and shell heat exchanger AWPS series
08、 Plate evaporator ACS Vap Series
09、 Plate-type condenser ACSCond series
10、 Duplex oil cooling device

INDUSTRY PRODUCT APPLY

工业产品应用

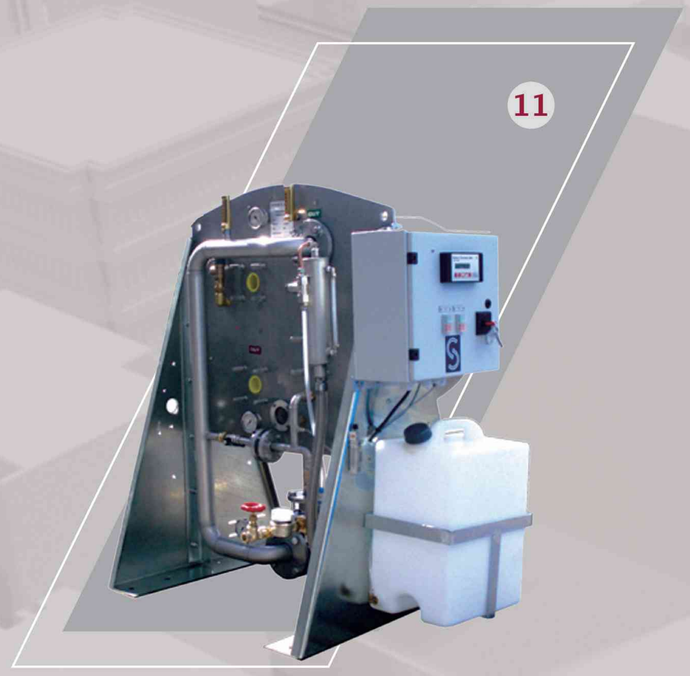

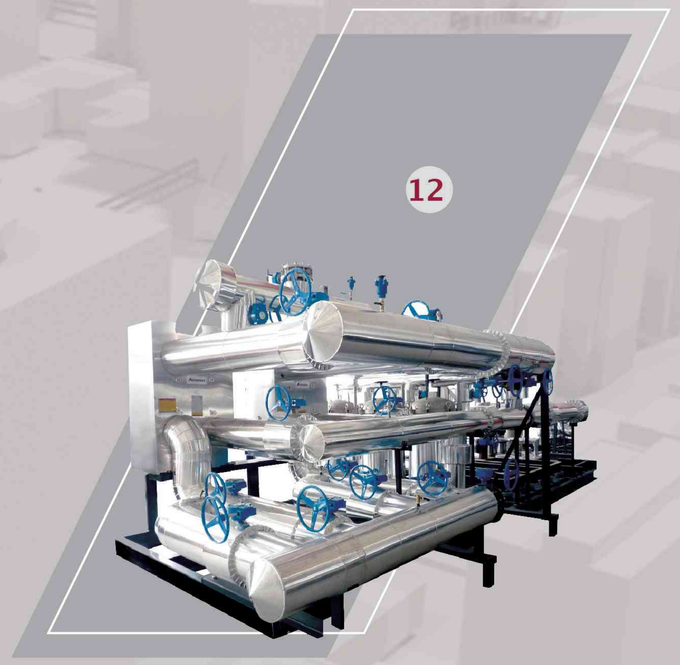

11、SDS系列海水淡化成套装置
12、ABJ定制系列板式换热机组
13、PS标准系列板式换热机组

11、 Seawater desalination equipment SDS series
12、 Plate heat exchanger unit ABJ series
13、 Plate Heat Exchanger Unit PS standard series

GROUP REVIEW

打破常规制造思路

一台换热机组的面世需要经过设计、工程开发和制造。而一台高品质换热产品的诞生除了前两方面的因素之外，制造环节也占据了重要的位置。制造工艺水平的高低将决定一台换热产品是否真正具有高质量。

Breaking the conventional manufacturing ideas

The introduction of a heat exchanger unit needs to go through the design, engineering development and manufacturing. And the birth of a high-quality heat transfer products in addition to the first two factors,

Manufacturing links also occupy an important position. The level of manufacturing process will determine whether a heat exchanger product is really high quality.

艾克森介绍 ABOUT US
艾克森优势 ADVANTAGE

上海艾克森集团有限公司是专业从事换热设备研发、制造、销售及服务的换热解决方案提供商，公司通过IS09001:2008质量体系认证、IS014001:2004环境体系认证、OHSAS18001:2007职业健康安全体系认证。注册资金5580万，年销售额超过5亿人民币，是板式换热机组国家标准起草单位。

2002年成立中美合资上海艾克森新技术有限公司，引进美国技术在国内率先生产板式换热器产品。发展至今，艾克森已成为行业领先的换热设备生产商之一。艾克森集团公司生产总部位于中国上海市黄渡工业园，拥有谢春路工厂、曹安路工厂和太仓港区工厂,3个制造工厂共计10多万平米,年生产换热器30000台、换热机组5000套，是全球最大的换热设备生产基地之一。公司拥有先进的设备引进全球领先的电泳生产线和自动化焊接机器人等设备，生产的产品质量和性能稳定可靠，全球领先。遵照全球统一的AS标准生产包括板式换热器、板式换热机组、板壳式换热器、全焊式换热器、蒸发器及冷凝器、工艺水冷却系统、余热回收系统在内的全系列换热设备，同时也提供符合ASME、PED-CE、API、JIS、IEC、DNV、ABS、BV、CCS、GB等国际规范和标准的产品。

公司主要负责向亚太地区的暖通空调、制冷、能源电力、冶金、化工、食品、电子、船舶及环境处理等市场提供随需应变的换热解决方案和客户服务，公司直属的销售和服务网络覆盖国内27个主要省市，拥有400多个服务网点,2个技术培训和产品中心,产品提供全国或全球联保服务，能就近为客户提供快速、高效的服务。赢得了20000多个项目的实力应证，包括SIEMENS、BAYER、BASF、DOW、BOSCH、3M、HITACHI、COCACOLA、UNILEVERJNTERCONTINENTAL,EMERSON、HYDNDAI、SINOPEC、LAFARGE、FOXCOM等全球500强客户的信赖，选择艾克森—让你的工作变的更加轻松。

About Us

Shanghai ACCESSEN Group Co.,Ltd is specialized in designing, manufacturing, sale and service of heat exchanger. And it has obtained the quality certificates of ISO9001:2000, IS014001:2004, OHSAS18001:1999. The company has a registered capital of 55.8 million RMB. With annual sales of about 500 million RMB in 2012. National standards drafting unit of plate heat exchanger unit.

Our company is established in 2002 and located in Shanghai Huangdu industrial park in China. Owned the period Caoan Road plant, the Xiechun Rd factory, and the Taicang plant, the total three plant area more than 100000 square meters, it has become one largest plate heat exchanger' s manufacturers in the world. ACCESSEN strictly according with AS standards to produce plate heat exchange, plate heat exchanger unit, plate and shell heat exchanger, full welding heat exchanger, evaporator and condenser, process are as per international code, such as ASME、PED-CE、API、JIS、IEC、DNV、ABS、BV、CCS、GB, etc.

Our corporation is mainly responsible for the Asia Pacific region, offer heat transfer solution and customer services of different markets, such as HVAC, refrigeration, energy, power, metallurgy, chemical, food, electronic, marine and environmental treatment. Company's sales and service network covering domestic 27 major cities, with more than 400 service outlets, 2 technical training and product centers, offer national or international warranty service, with fast and efficient service, and won the trust of fortune 500 companies, such as SIEMENS、BAYER、BASF、DOW、BOSCH、3M、HITACHI、TATA、COCACOLA、UNILEVER、INTERC〇NTINENTAL、EMERSON、HYDNDAI、SINOPEC、LAFARGE、FOXCOM etc. Selecting ACCESSEN, let your work be more relaxed.

艾克森为你提供全球领先的随需应变换热解决方案，专业提供高品质的换热设备和快速、高效的服务。

→ "On Solution For Heat Exchanger" we will offer you professional and qualified thermal transfer equipment and efficient service.

Advance manufacture toward to the future

Accessen Taicang manufacture capacity which is launched in October is entering into full load stage, it is the most advance and the biggest manufacturer so far in China, with 30000 sets Plate Heat Exchanger and 5000 sets Sub-stations production annually, Accessen become into one of world largest manufacture base, service in HVAC and industrial applications for more than 20 provinces and cities in China by "Heat Transfer Solution Providing on demands"

面对未来的先进制造

艾克森于2014年10月启动的太仓工厂已进入了满负荷生产状态，这是中国至今最大规模、最先进的整机工厂，每年可生产30000台套换热器和5000套换热机组，是全球最大的换热设备生产基地之一，为国内20多个省市的供热/冷以及工业应用产品，提供随需应变的换热解决方案。

The prospective is rooted by current competiveness

Taicang III phase Factory, (main manufacture for substation system) total land cover area is more than 50,000 m^2, processing the electrophoresis coating and Auto Robert welding line, annual capacity is 5000 sets.

实力成就未来

三期太仓工厂，（主要生产机组和系统集成产品）总面积超过5万m^2，拥有电泳测试自动焊接等流水线的现代化工厂，年产能5000套。

50,000 m^2

The extraordinary is originated by Criterion

Criterion and standardized operation, advanced and professional facilities, building a milestone for each qualification work.

规范造就不凡

规范技术的操作流程，先进且成熟的配套设施，为每一份高品质打下坚实的基础。

The Legend Is Created By Rigorous Attitude

Xie Chun II phases Factory, (main manufacture for Plate Heat Exchanger, All Welded Plate Heat Exchanger, and Control Cabinet), total land cover area is more than 20,000 m², and production capacity is 30,000 pieces Plate Heat Exchanger and 3,000 pieces Control cabinet. The main electrical components of Control cabinet are from ABB etc. well-known brand with CCC certified.

Which had been strictly inspected before leaving factory, and could instant work after installation.

20,000 m²

严谨造就传奇

二期谢春路工厂，（主要生产板式换热器、焊接式换热器、电气控制柜等）面积超过2万m²，年产换热器30000台，电气控制柜3000套。电气控制柜主要元器件采用西门子ABB等行业知名品牌，具有CCC认证，产品出厂前经过完整性能测试，现场可直接使用。

Even Half Pressing line also could keep production capacity

Accessen Process numbers of various Tons pressers, they are optional and optimal for different sizes of plates, improve pressing precision and efficiency, and shorten the production time.

冲压生产线减半也能保持产能

艾克森拥有数量众多的不同吨位的压机，根据不同板型模具尺寸进行多种选择，更灵活的使用和提高板片的压制精度和效率，也可以更合理的安排交货时间。

Process Technology decides product， squality, now we are facing a new Intelligent Manufacturing era

How to produce a high-quality heat exchanger, not only by good idea, skilled worker or advanced facilities, more important, it depends on a modernized production quality system. By means of production standard and process improvement, strictly quality control system building, inspection measurements upgrading, then we could achieve qualified production.

工艺决定品质、一个崭新的智慧制造正在来临

如何能生产一台高品质的换热设备，不仅仅需要一个好的想法、熟练的工人、先进的加工设备，更重要的是一个现代化的生产质量体系，通过改进生产工艺和制造标准，严格的质量控制体系，通过性能测试不断的改进，保证每一台设备都拥有可靠的性能。

More Precision in Welding

Full Automatically Welding Robot upgrades production, make it more stable and reliable, less welding defectives,

焊接点精度更高

全自动焊接机器人提升稳定性和可靠性，避免焊接缺陷，生产更安全高效。

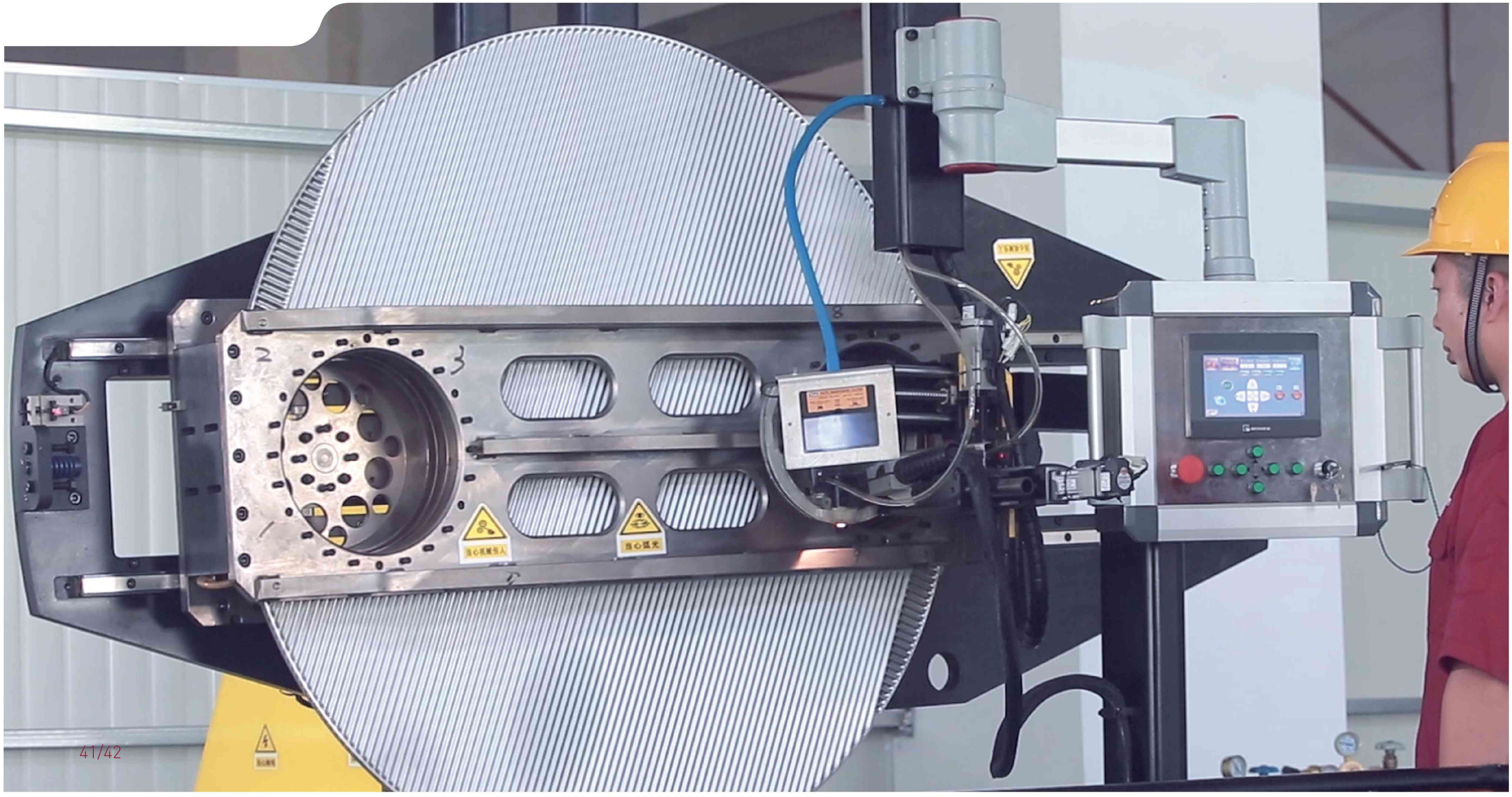

跨入一流的制造企业

艾克森的工人们在麻利地工作，切割、焊接生产线是普通工厂的生产重要区域，而艾克森工厂的生产线上却出现了不该有的东西——红色的机器人。

对一些工厂来说，切割、焊接工序是由工人操作，应对质量及产量十分不利，艾克森工厂投建机器人生产线进行切割、焊接，使用机器人切割保证管件尺寸精确，装配公差比原来精确25%；全新的六自由度点焊机器人24小时不间断工作，焊接质量稳定、均一，焊缝更为结实、密封，同时提升刚度，使艾克森换热产品让用户使用更安心。

Enter into fist class manufacturer group

The trimming, cutting and welding line play important role in Accessen manufacturing processes, now we apply "Red Auto Robot"for these processes.

"Red Auto Robot" bring us 25% increasing in deviation precision for trimming, cutting and welding compared with previous manual operating; Total 6 units of "Red Auto Robot" works 24 hours without stop, contributing even filling, strong, rigid welding line, increasing custom satisfactory.

First and only one who introduced Automatic Electrophoretic Coating line in China

From "Spraying Coating", "Spraying Plastic and Heating solidification" to Automatic " Electrophoretic Coating", Accessen painting process is keep upgrading. Whatever production appearance or performance, we are striving to be No.1 ("Electrophoretic Coating" could take good care of Pipeline inside and Welding part, enhance its anti-corrosion, anti-water stress performance.

国内换热设备厂唯一电泳涂装生产线

从喷涂到喷塑高温固化再到电泳，艾克森的产品在不断的提升，无论是性能还是外观，我们始终做到第一，（电泳能很好的处理管道内部和焊接焊缝的部位，提高防腐性能和水力特性。）

We keep our commitments for High Quality Standard

Make breakthrough by Automatic "Electrophoretic Coating" process. Different from traditional "Spray Painting", it need be adjusted according to equipment internal temperature and humidity, and the over-dose paint which contain noxious will be removed by water flushing. Every inches had been filled by painting film, and extend, cover smoothly and evenly whatever interior or exterior wall of pipe, good painting penetration, enhance its anti-corrosion performance.

对高品质的挑战我们始终不曾妥协。

先进的电泳涂装生产线。对高品质的挑战我们始终不曾妥协。先进的电泳涂装生产线，确保每一处细节都经得起时间的考验，力求完美。

以往喷漆的做法，需要对设备内的湿度和温度进行精细的调整，同时为了防止溢出的涂料产生有害物质，需要立即用水冲刷。艾克森工厂引进行业里第一条电泳涂装线，实现完全自动化，无人化生产；管道外观展平平整，内外壁得到均一的膜厚，凹进去的和进行焊接之后出现的缝细等地方都有均匀且平滑的油漆膜，泳透性好，管件内腔的防腐性极大提高。

Enter into first class manufacturer group

Total testing platform, not limited to hydrostatic test, flow resistance, water pump, control, electrical work, such as vibration and noise. Machine appearances including internal wiring, delivery can be put to use quickly, saving you valuable time.

跨入一流的制造企业

机组全性能测试平台，不仅限于水压试验，还包括流量，阻力，水泵运行，控制策略，电器运转，震动和噪音等。整机出场包括内部接线，到货就能快速投入使用，大大节约了你的宝贵时间。

DEVELOPMENT TOGHTER

人是未来，与最优秀的人同行，与伟大的公司同行。
艾克森人不断迈向新的高度，永恒的激情并富于挑战精神，于所在领域争当世界第一而全力以赴。
艾克森人能够对周围的变化保持高度的兴趣与关注，善于发现问题并持续不断寻求能够引领改善 / 革新的最佳方式及创新思潮，
并乐于精确和彻底进行变化与革新。

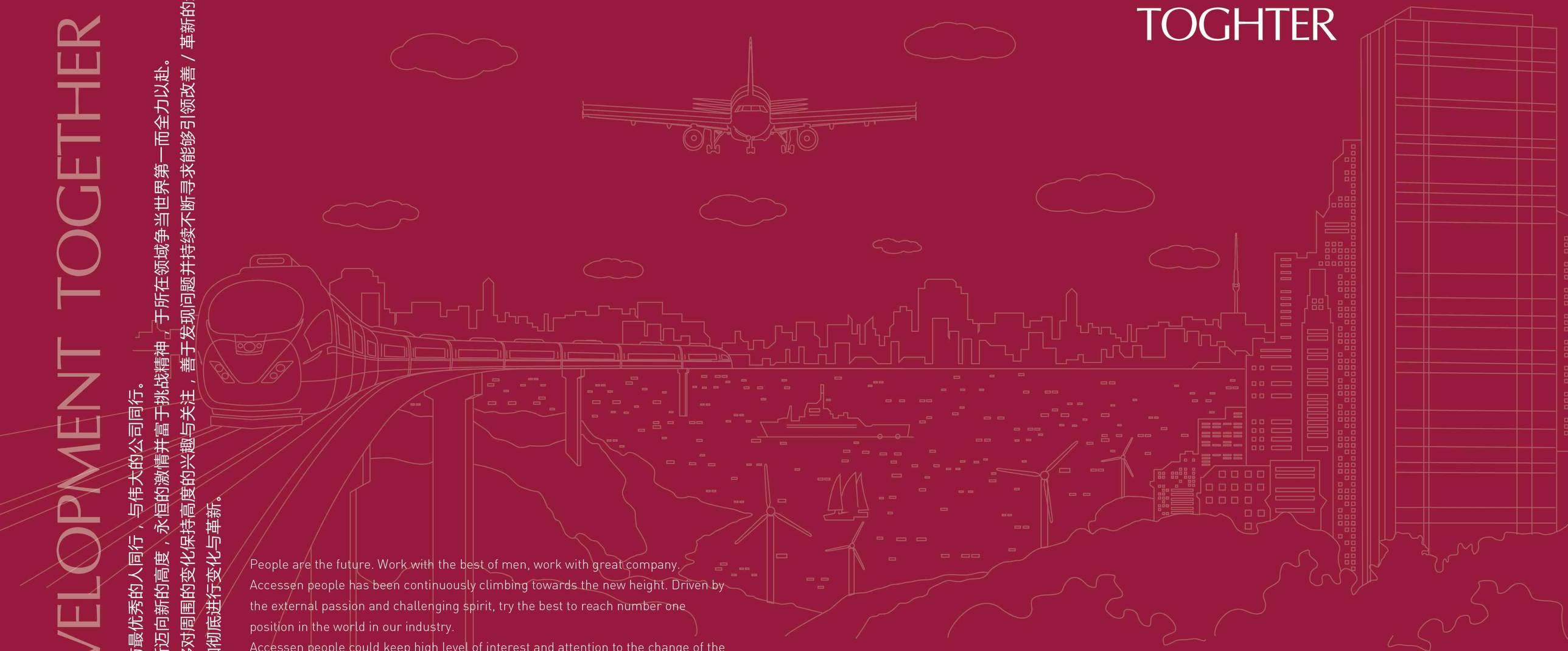

People are the future. Work with the best of men, work with great company.
Accessen people has been continuously climbing towards the new height. Driven by the external passion and challenging spirit, try the best to reach number one position in the world in our industry.
Accessen people could keep high level of interest and attention to the change of the surroundings. To be good at discovering problems and continuously seek to find the best measurements and innovation ideas to lead the improvement and innovation.
And be happy to accurately and thoroughly to realize the improvement and innovation.

研究和开发	Research and development
人力资源和企业文化	Labor resource and enterprise cultureE
责任规划	Responsibility and planning

适合研究开发的最佳人力资源和基础设施

艾克森做为较早本地化生产的企业，率先进口板片和垫片原材料在国内压制和生产换热设备，经过十几年的产品应用和开发，于2005年在国内建立了北京上海两个技术研发中心，根据中国国情开发的不同系列的专用产品，取得了市场和客户的认可。拥有卓越的研发基础设施和良好的工作环境，持续不断的技术创新，完善的产品系列使提供随需应变换热解决方案变成可能，艾克森以换热领域的杰出人力资源为后盾，已成为诸多国家标准的起草人。

→ As the earlier localization production enterprise, Accessen take the lead to import the plates and gaskets raw material to make the plate punching and assembly of the plate heat exchanging equipment. After more than 10 years of production application and development, Accessen establish two technical research center in Beijing and Shanghai at 2005. To develop different series of special products according to the Chinese local market request and get the approval of the market and clients. We have excellent research infrastructure and working conditions, continuous technical innovation, complete product series. These make it is possible to change the heat exchanging solution on demand. On the basis of outstanding labor resource in the heat exchanging industry, Accessen has been the constitutor of many national standards.

The best of labor resources and infrastructure suitable for the research and development

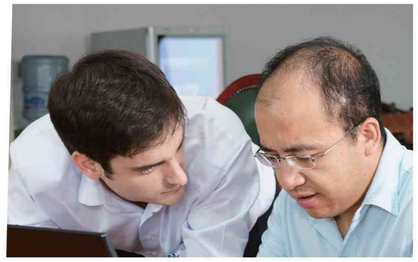

培育全球化人才，营造一流企业文化

艾克森坚信，员工才是最宝贵的资源。因此，艾克森通过系统培训和人力资源方面不断投入，取得发展。通过创造愉快的工作环境，使公司管理人员和员工能够集中精力投入工作并产生惊人成果，由此建立支持员工随同公司一起发展的企业文化。

Cultivate the globalization talents ,Build first–class enterprise culture.

→ Accessen believe that the talents are the most valuable resource. Therefore, Accessen get the development through the system training, and constantly put in labor resources. To create a pleasant working environment, make the management and employ could concentrate on the work and get amazing results. Thus to build the enterprise culture to support the employees to develop together with the company.

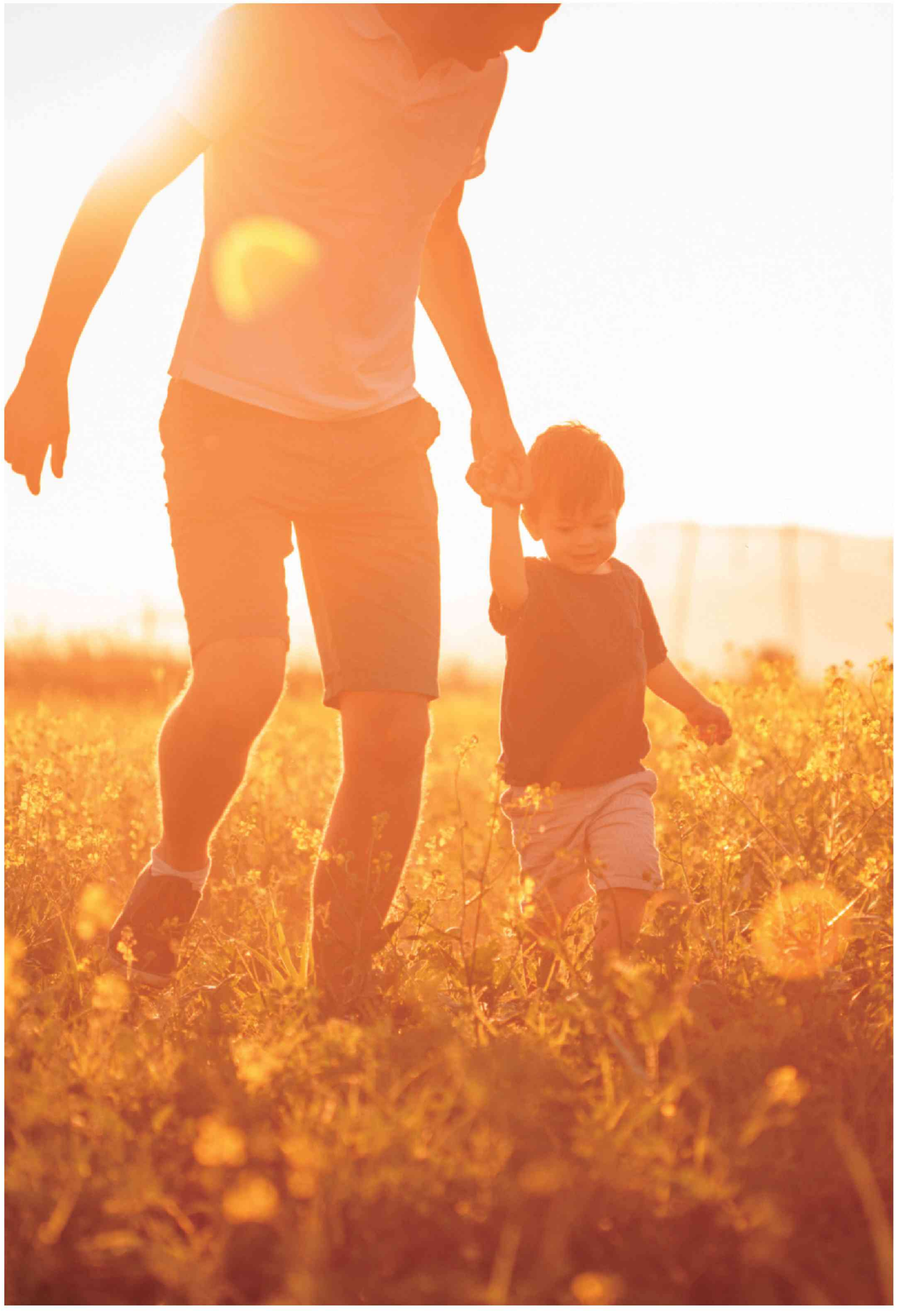

尊重
Respect

诚信
Integrity

合作
Cooperation

积极
Positive

远景
Perspective

艾克森不断创新，挑战极限。

2001 一期曹安路工厂筹建

2002 成立中美合资上海艾克森新技术

一期同期投产

引进国外技术生产板式换热器和换热机组

2003 成立上海艾克森集团

2005 获得高新技术企业，提供1℃温差的制冷换热器

2006 世界最大的DN500口径换热器投产，提供核电应用产品

2007 二期谢春路工厂筹建

2008 引进国外技术生产焊接式换热器

广州新电视塔610m（小蛮腰）

2009 广州电视台二期，提供0.5度温差的制冷换热器

2010 成为2010世博换热设备最大供应商

取得美国石油学会API认证

取得美国机械工程师学会ASME认证

取得欧盟CE认证

2011 二期谢春路工厂投产

三期太仓工厂筹建

2012 三期太仓工厂A片区投产

成为板式换热机组国家标准起草单位

太仓工厂投产成为全球最大的换热设备生产基地之一

全国27个主要城市设有办事处，产品用户超过10000家

2014 获得KR、NK、RINA、GL、ABS、CCS

取得特种设备制造许可证

2015 武汉绿地中心636m国内第一高楼

获得行业换热器品牌综合评选前三

提供单台换热量超过72000KW的换热器

2016 服务于40座超过200米的超高层建筑,包括636m（国内第一高楼）/地标

Accessen continuously make the innovation and challenge the limit.

2001 First stage, begin to build Can'an road factory.

2002 Establish Sino-America joint venture "SHANGHAI ACCESSEN NEW TECHNOLOGY CO.,LTD."

Cao'an road factory goes into operation

Introduce foreign technology to produce plate heat exchanger and heat exchange units

2003 Establish "Shanghai Accessen Group Co.,Ltd."

2005 Be awarded the title "High and new technology enterprise ". Provide the 1℃ temperature difference heat exchanger

2006 he largest size DN500 connection nozzles heat exchanger is put into production,for the application in the nuclear power station.

2007 Second stage, begin to build Xiechun road factory

2008 Introduce the foreign technology to produce the welded heat exchanger.

Canton new TV tower 610m

2009 Provide 0.5℃ temperature difference heat exchanger in second stage in Guangzhou TV tower.

2010 Become the biggest heat exchanger equipment supplier in 2010 EXPO

Get the API certificate

Get the ASME certificate

Get the CE certificate

2011 Second stage Xiechun road factory is put into operation

Begin the build of third stage Taicang factory

2012 A district of Taicang factory is put into operation

Become as the constitutor of national standard of plate heat exchange unit.

Taicang factory is put into operation, become as one of the largest heat exchanging equipment manufacturing base in the world.

Establish sales office at 27 main domestic cities, the customer numbers are more than 10,000.

2014 KR、NK、RINA、GL、ABS、CCS Get the KR,NK,RINA,GL,ABS,CCS certificate

Obtain the special equipment manufacturing license

2015 The Chinese tallest buiding 635m high Wuhan Greenland Center

To be elected as the top 3 brand in the heat exchanger industry

Provide the heat exchanger of unit heat load more than 72000KW

2016 Served in more than 40 super high-rise buildings higher more than 200m,include the tallest 636m building.